PARTS FOR THOR & MACDONALD/THOR U-TYPE SCABBLERS

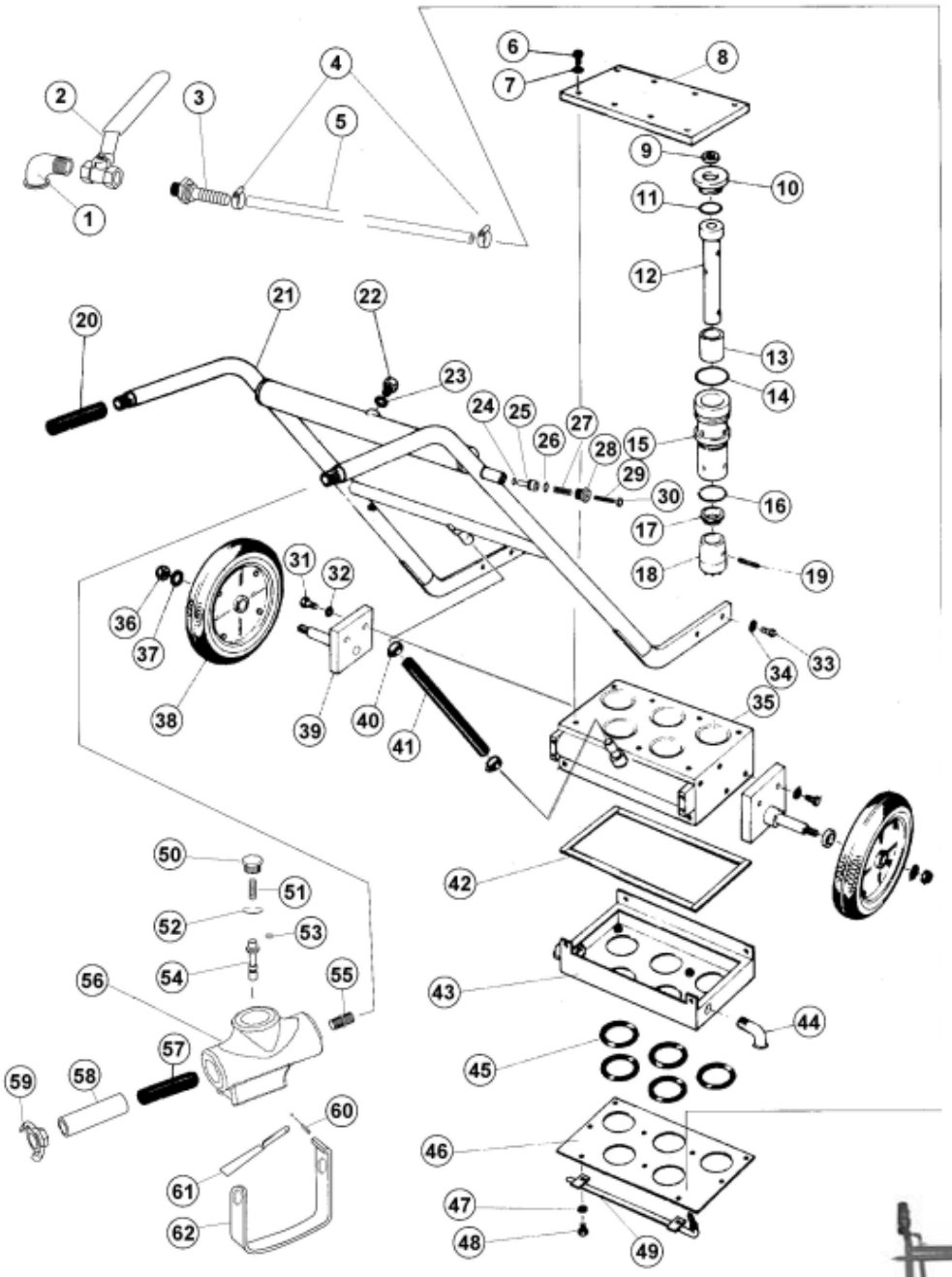

PARTS FOR THOR & MACDONALD/THOR U-TYPE SCABBLERS

Index	Part No	Description		Index	Part No	Description
NI	588-A160	LEVER THROTTLE ASSEMBLY		28	203023	O.V. BUSHING
NI	4U-359	SCREW		29	203024	O.V. ADJ. PIN
NI	588-157	VALVE FACE CAP		30	203025	PIN LOCK NUT
NI	203044-T	THOR WHEEL ASSY.		31	912510	AXLE BLOCK SCREW
NI	P002525	INLET BUSHING		32	203026	LOCKWASHER
NI	S009438	HEX H D SCREW		35	202805	CYLINDER BLOCK
1	203074	3/8 STREET ELL		36	834737	LATCH NUT
2	203075	CONTROL VALVE		37	203044H-2	THRUST WASHER
3	C089068	NIPPLE		38	203044-W	THOR WHEEL
4	906000	HOSE CLIP		39	203841-T	THOR AXLE ASSY.
5	203055T	1/2" ID X 13/16 OD HOSE		40	906001	CLAMP
6	912507	SET SCREW		41	203019	U5 MAIN HOSE
7	203026	LOCKWASHER		42	202008	SHROUD S L STRIP
8	202004	TOP PLATE		43	202807	SHROUD BODY
9	203028	TOP CAP INSERT		44	C037561	STREET ELBOW
10	203029	CYLINDER TOP CAP		45	203050	SHROUD S L RING
11	203030	TOP CAP S L		46	202009	SHROUD PLATE
12	203031	PISTON		47	S000271	LOCKWASHER
13	203032	CYLINDER LINER		48	912103	SHROUD SET SCREW
14	203033	CYLINDER S L TOP		49	202810	AIR BLOW PIPE
15	203834	CYLINDER WITH LINER		50	588-164	THROTTLE VALVE CAP
16	203035	CYLINDER S L BOTTOM		51	22SR-262	THROTTLE VALVE SPRING
17	203036	WIPER RING		52	588-159A	THROTTLE VALVE FACE
18	810025	5 POINT BIT		53	1007	T.V. S L
19	203037	BIT RETAINING PIN		54	588-161A	THROTTLE VALVE
20	203017	HANDLE GRIP		56	588-160	THROTTLE BODY
21	202801	HDL FRAME ASSY		57	PDO5-2	PIPE NIPPLE
22	3024	OIL PLUG		58	203017R	HDL GRIP RIGHT SIDE
23	3023	OIL PLUG S L		59	C015125	1" FEMALE HOSE COUPLING
24	5005	S L		60	534-434	THROTTLE LEVER PIN
25	203021	OILER VALVE		61	588-273	THROTTLE LEVER
27	203022	O.V. SPRING		62	207016-T	THOR HANDLE GUARD

NI = "Not Illustrated".